序号/Rev.No.	名称/Title	文件编号/File No.
1	118-A塑料件	QJ/XYT-11132
2	118-A端子	QJ/XYT-11120

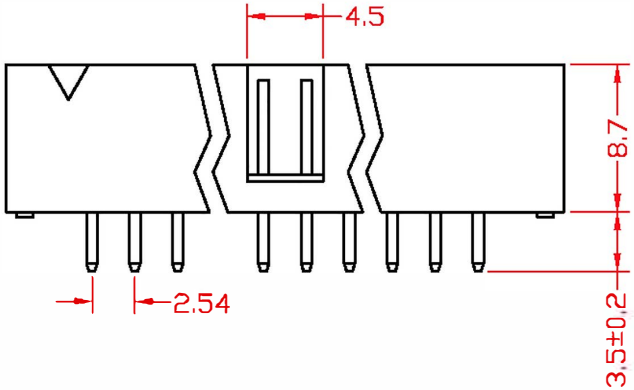

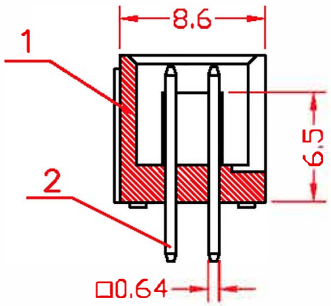

Specifications:
Contact Resistance: 30mΩ max.at DC 100 mA
Insulator Resistance: 1000MΩmin.at DC 500V
Current Rating: 1AMP

Dielectric Withstanding
Voltage: AC 1000V For 1 minute
Operating Temperature: -55℃--+105℃
Contact: Brass Gold Plated
Housing: PBT &30% Glass Fiber (UL 94V-0),black

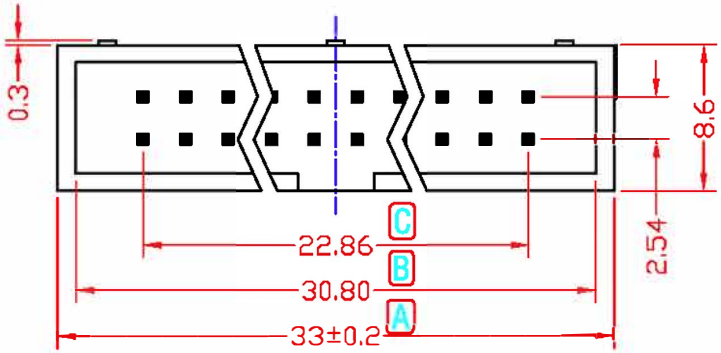

Dimension

Position	A	B	C	Order
10	20.30	18.10	10.16	
12	22.84	20.64	12.70	
14	25.38	23.18	15.24	
16	27.92	25.72	17.78	
20	33.00	30.80	22.86	yes
26	40.62	38.42	30.48	
30	45.70	43.50	35.56	
34	50.78	48.58	40.64	
40	58.40	56.20	48.26	
50	71.10	68.90	60.96	
60	83.80	81.60	73.66	
64	88.88	86.68	78.74	

设计/Designed by	绘图/Drawing by	审核/Checked by	批准/Approved by	未注公差 General Tolerance
				X ± 0.2 X° ± 2°
		图名/Title	文件编号/File No.	.X ± 0.1 .X° ± 1°
		118A-20GSK	QJ/XYT-12046	.XX ± 0.05 .XX° ± 0.5°
			页序/Sheet	.XXX ± 0.01
		备注/Remark		单位/Units: mm

序号/Rev.No.	更改记录/Revision note	签名/Signature	日期/Date