DO NOT SCALE
DIMENSIONS IN mm

METRIC

THIRD ANGLE PROJECTION

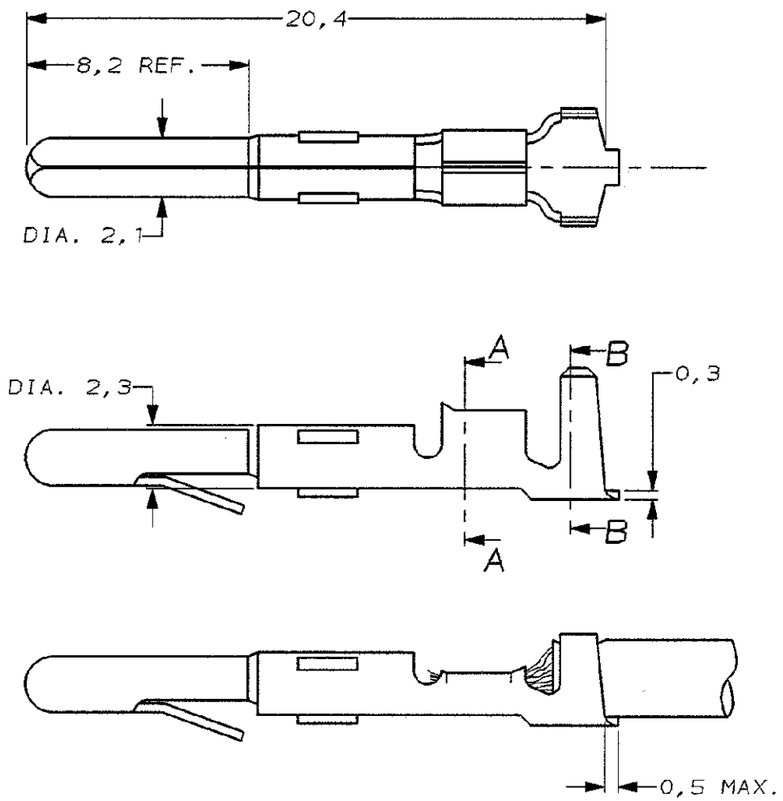


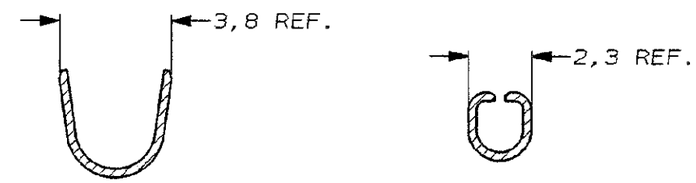


SECTION B-B

SECTION A-A

| |
|---|
| WIRE RANGE : 1,0-2,5 mm |
| INSULATION RANGE : 2,9 MAX. DIA. |

| | | | |
|---|---|---|---|
| | - | - | - |
| | | - | - |
| | - | - | - |
| | - | - | - |
| | - | - | - |
| | - | - | - |
| | - | - | - |
| | - | - | - |
| | - | - | - |
| | PRE-TINPLATED | PHOSPHOR BR. | 163307-4 |
| | UNPLATED | PHOSPHOR BR. | 163307-3 |
| | PRE-TINPLATED | BRASS | 163307-2 |
| | UNPLATED | BRASS | 163307-1 |
| - | PLATING | MATERIAL | PARTNUMBER |

| | | | | |
|---|---|---|---|---|
| - | - | - | - | - |
| - | - | - | - | - |
| - | - | - | - | - |
| - | - | - | - | - |
| - | - | - | - | - |
| - | - | - | - | - |
| - | - | - | - | - |
| D | EH-1221-96 | JvL | AB | 24-10-96 |
| LTR. | REVISION RECORD | DR. | CHK. | DATE |

CUSTOMER DRAWING — FOR REFERENCE ONLY WILL NOT BE UPDATED

© COPYRIGHT 19- BY AMP HOLLAND B.V.
ALL INTERNATIONAL RIGHTS RESERVED. AMP PRODUCTS MAY BE COVERED BY U.S. AND FOREIGN AND/OR PATENTS PENDING.

THIS DRAWING IS UNPUBLISHED
~~RELEASED FOR PUBLICATION ,19~~

AMP HOLLAND B.V.
's-Hertogenbosch,
The Netherlands.

NAME
PIN MATE-N-LOK.

| | | | |
|---|---|---|---|
| DR.: J.v.LIEMPT | CHK.: A.BIJNEN. | APP.: M.v.DRIEL | |
| DATE: 24 OCT 96 | DATE: - | DATE: - | |

| DWG.No. | | REV.LTR. | SHEET | |
|---|---|---|---|---|
| C-163307 | | D | 1 OF 1 | A3 |

R6-210 (REV.04-91)

8 7 6 5 4 3 2 1

F E D C B A